M0DGQ

Rx AF module

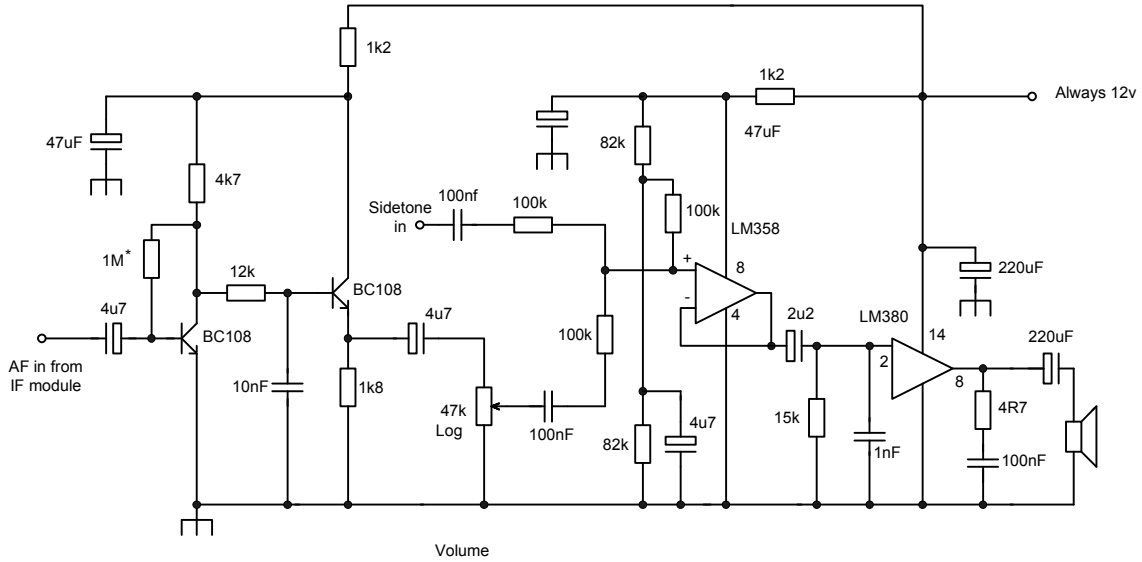

* select for 6v
On collector of
transistor